October 1, 2018
Lit. No. 75371, Rev. 01

TURFEX®
INNOVATIVE TURF SOLUTIONS

TS-300-1 & TS-300-EG-1 Tailgate Spreader

Owner's Manual and Installation Instructions

Original Instructions

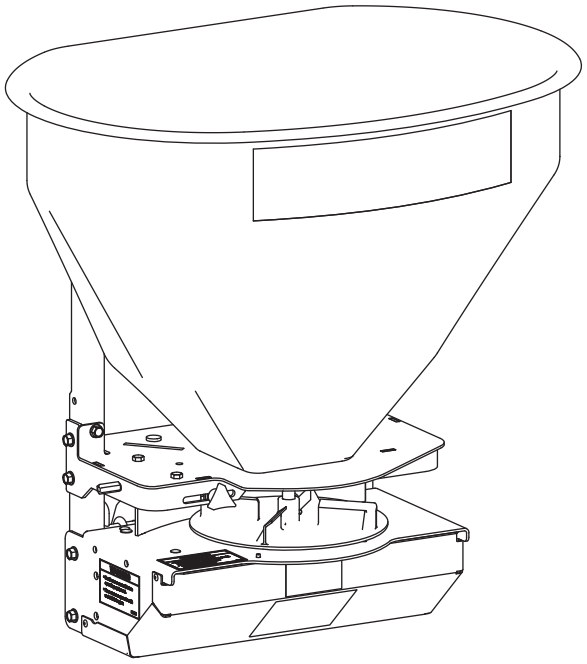

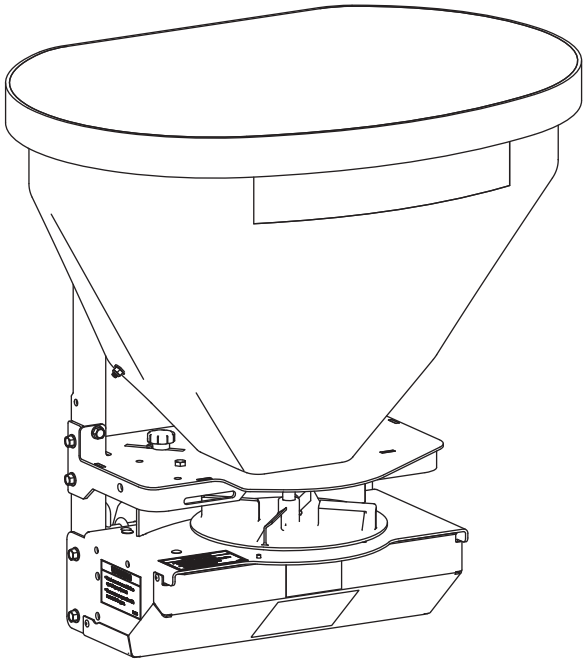

⚠ CAUTION

Read this manual before installing or operating the spreader.

This manual is for TurfEx® TS-300-1 & TS-300-EG-1 tailgate spreaders with serial numbers beginning with 170109 and higher.

This document supersedes all editions with an earlier date.

TABLE OF CONTENTS

This manual has been prepared to acquaint you with the safety information, operation, and maintenance of your new tailgate spreader. Please read this manual carefully and follow all recommendations. This will help ensure profitable and trouble-free operation of your tailgate spreader. Keep this manual accessible. It is a handy reference in case minor service is required.

When service is necessary, bring your spreader to your distributor. They know your spreader best and are interested in your complete satisfaction.

NOTE: This spreader is designed to spread snow and ice control materials only. Do not use it for purposes other than those specified in this manual.

Warranty Registration

Follow the directions on the TurfEx® Warranty Registration and Customer Survey form included in the spreader literature kit.

The registration form is also available online at *www.turfexproducts.com*. Under "Support" select "Warranty Registration."

OWNER'S INFORMATION

Owner's Name: _____

Date Purchased: _____

Distributor Name: _____ Phone:_____

Distributor Address:_____

Vehicle Model:_____ Year: _____

Spreader Model: _____ Serial #:_____

Spreader Weight:_____lb/kg

SAFETY DEFINITIONS

⚠ WARNING

Indicates a potentially hazardous situation that, if not avoided, could result in death or serious personal injury.

⚠ CAUTION

Indicates a potentially hazardous situation that, if not avoided, may result in minor or moderate injury. It may also be used to alert against unsafe practices.

NOTE: Indicates a situation or action that can lead to damage to your spreader and vehicle or other property. Other useful information can also be described.

WARNING/CAUTION LABELS

Please become familiar with the warning and caution labels on the spreader.

NOTE: If labels are missing or cannot be read, see your sales outlet.

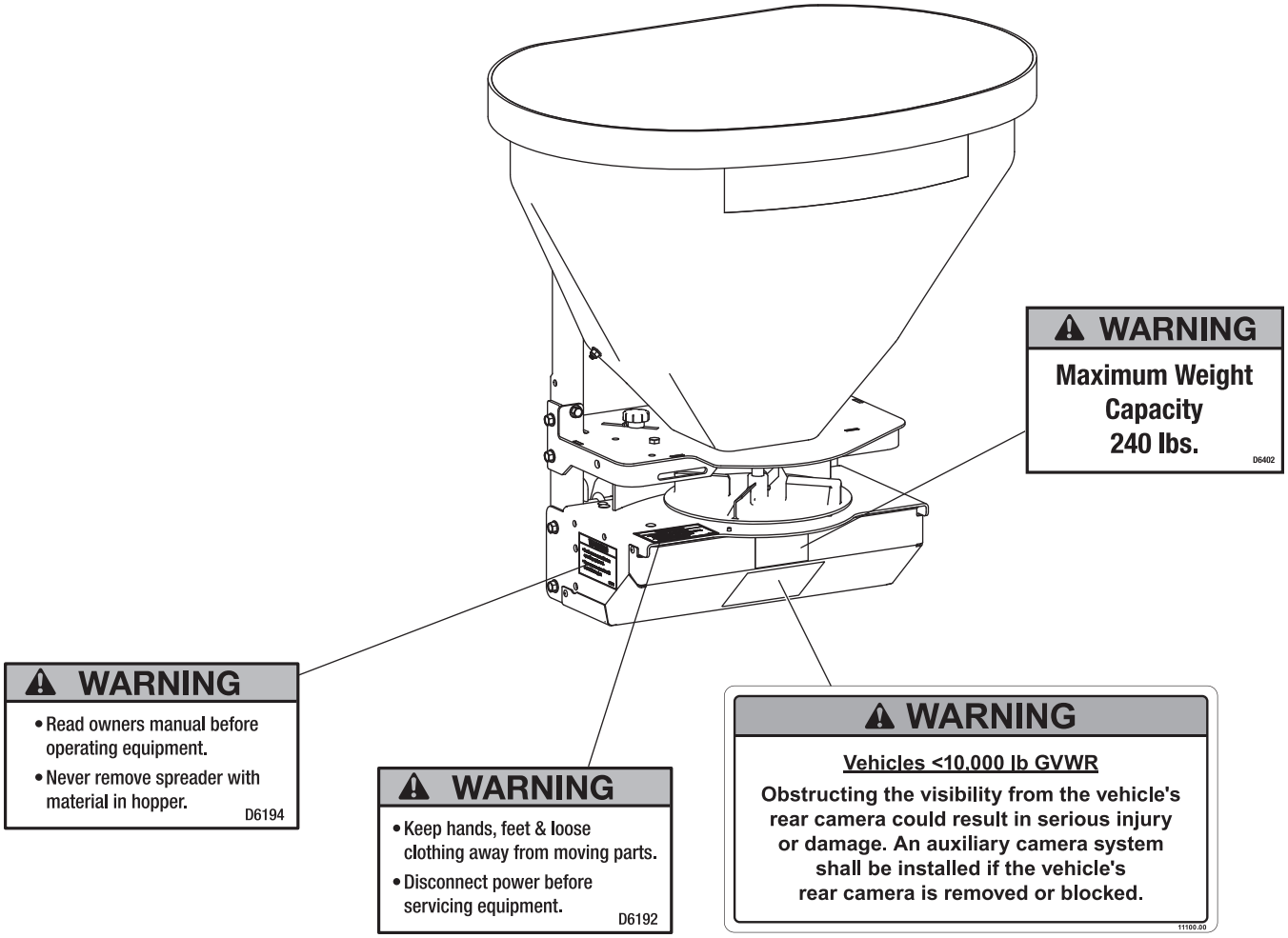

SERIAL NUMBER LABEL

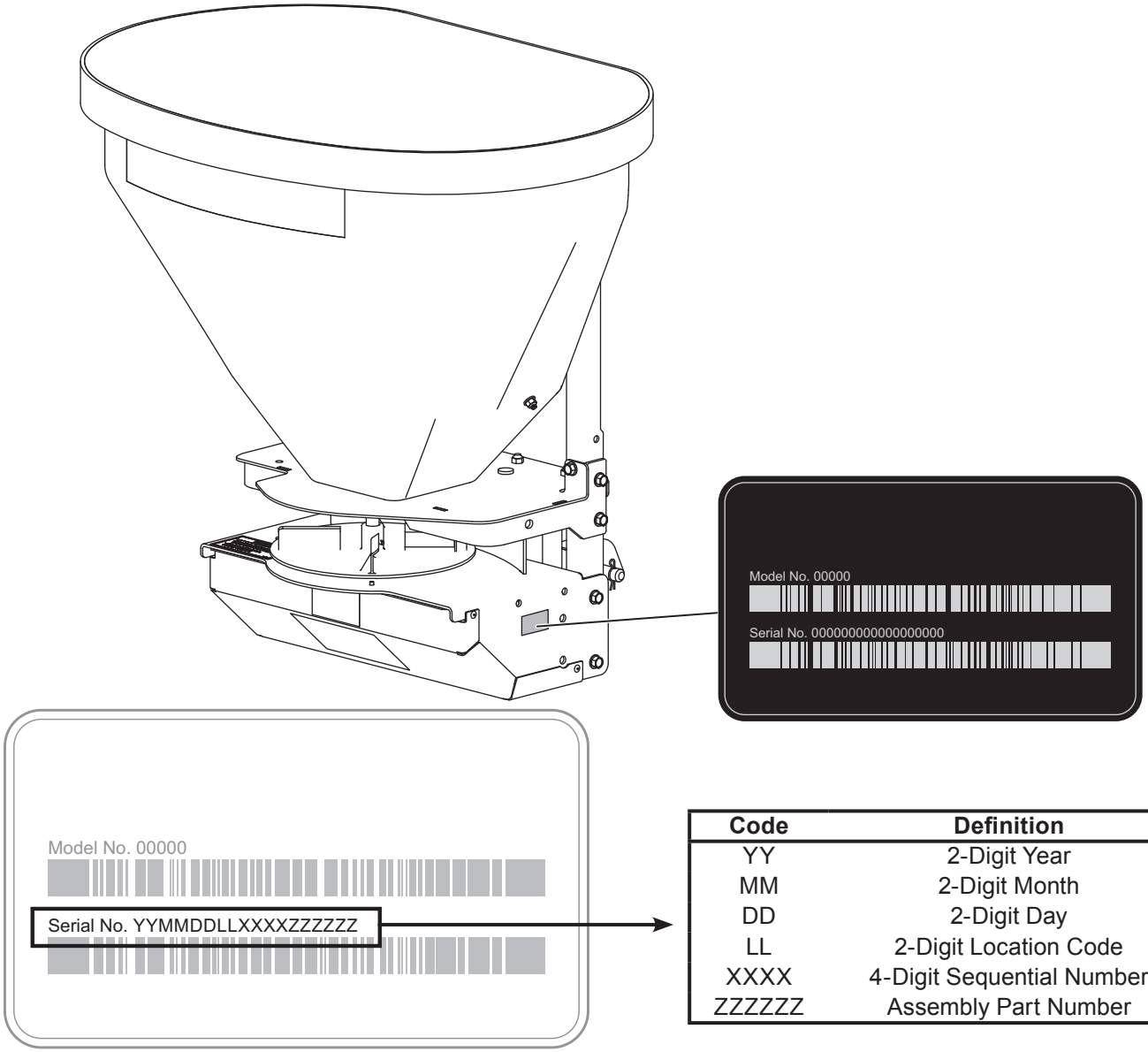

Code	Definition
YY	2-Digit Year
MM	2-Digit Month
DD	2-Digit Day
LL	2-Digit Location Code
XXXX	4-Digit Sequential Number
ZZZZZZ	Assembly Part Number

SAFETY PRECAUTIONS

Improper installation and operation could cause personal injury and/or equipment and property damage. Read and understand labels and this Owner's Manual before installing, operating, or making adjustments.

⚠ WARNING

- **Driver to keep bystanders minimum of 25 feet away from operating spreader.**
- **Before working with the spreader, secure all loose-fitting clothing and unrestrained hair.**
- **Before operating the spreader, verify that all safety guards are in place.**
- **Before servicing the spreader, wait for auger and spinner to stop.**
- **Do not climb into or ride on spreader.**

⚠ WARNING

Overloading could result in an accident or damage. Do not exceed GVWR or GAWR ratings as found on the driver-side door cornerpost of the vehicle. See Loading section to determine maximum volumes of spreading material.

⚠ WARNING

Vehicles <10,000 lb GVWR: Obstructing the visibility from the vehicle's rear camera could result in serious injury or damage. An auxiliary camera system shall be installed if the vehicle's rear camera is removed or blocked.

⚠ CAUTION

If rear directional, CHMSL light, or brake stoplights are obstructed by the spreader, the lights shall be relocated, or auxiliary directional or brake stoplights shall be installed.

⚠ CAUTION

During the hopper spreader installation we recommend the addition of an OSHA compliant Backup Alarm. This alarm is required for OSHA governed employers.

⚠ CAUTION

- **Do not operate a spreader in need of maintenance.**
- **Before operating the spreader, reassemble any parts or hardware removed for cleaning or adjusting.**
- **Before operating the spreader, remove materials such as cleaning rags, brushes, and hand tools from the spreader.**
- **While operating the spreader, use auxiliary warning lights, except when prohibited by law.**
- **Tighten all fasteners according to the Torque Chart. Refer to Torque Chart for the recommended torque values.**

⚠ CAUTION

Disconnect electric and/or hydraulic power and tag out if required before servicing or performing maintenance.

⚠ CAUTION

DO NOT leave unused material in hopper. Material can freeze or solidify, causing unit to not work properly. Empty and clean after each use.

NOTE: Lubricate grease fittings after each use. Use a good quality multipurpose grease.

PERSONAL SAFETY

- Remove ignition key and put the vehicle in PARK or in gear to prevent others from starting the vehicle during installation or service.
- Wear only snug-fitting clothing while working on your vehicle or spreader.
- Do not wear jewelry or a necktie, and secure long hair.
- Wear safety goggles to protect your eyes from battery acid, gasoline, dirt, and dust.
- Avoid touching hot surfaces such as the engine, radiator, hoses, and exhaust pipes.
- Always have a fire extinguisher rated BC handy, for flammable liquids and electrical fires.

FIRE AND EXPLOSION

⚠ WARNING

Gasoline is highly flammable and gasoline vapor is explosive. Never smoke while working on vehicle. Keep all open flames away from gasoline tank and lines. Wipe up any spilled gasoline immediately.

Be careful when using gasoline. Do not use gasoline to clean parts. Store only in approved containers away from sources of heat or flame.

CELL PHONES

A driver's first responsibility is the safe operation of the vehicle. The most important thing you can do to prevent a crash is to avoid distractions and pay attention to the road. Wait until it is safe to operate Mobile Communication Equipment such as cell phones, text messaging devices, pagers, or two-way radios.

VENTILATION

⚠ WARNING

Vehicle exhaust contains lethal fumes. Breathing these fumes, even in low concentrations, can cause death. Never operate a vehicle in an enclosed area without venting exhaust to the outside.

BATTERY SAFETY

⚠ CAUTION

Batteries normally produce explosive gases which can cause personal injury. Therefore, do not allow flames, sparks, or lit tobacco to come near the battery. When charging or working near a battery, always cover your face and protect your eyes, and also provide ventilation.

- **Batteries contain sulfuric acid which burns skin, eyes, and clothing.**
- **Disconnect the battery before removing or replacing any electrical components.**

NOISE

Airborne noise emission during use is below 70 dB(A) for the spreader operator.

VIBRATION

Operating spreader vibration does not exceed 2.5 m/s^2 to the hand-arm or 0.5 m/s^2 to the whole body.

TORQUE CHART

⚠ CAUTION

Read instructions before assembling. Fasteners should be finger tight until instructed to tighten according to torque chart. Use standard methods and practices when attaching spreader including proper personal protective safety equipment.

Recommended Fastener Torque Chart

Inch Fasteners Grade 5 and Grade 8

Size	Torque (ft-lb) Grade 5	Torque (ft-lb) Grade 8	Size	Torque (ft-lb) Grade 5	Torque (ft-lb) Grade 8
1/4-20	8.4	11.9	9/16-12	109	154
1/4-28	9.7	13.7	9/16-18	121	171
5/16-18	17.4	24.6	5/8-11	150	212
5/16-24	19.2	27.3	5/8-18	170	240
3/8-16	30.8	43.6	3/4-10	269	376
3/8-24	35.0	49.4	3/4-16	297	420
7/16-14	49.4	69.8	7/8-9	429	606
7/16-20	55.2	77.9	7/8-14	474	669
1/2-13	75.3	106.4	1-8	644	909
1/2-20	85.0	120.0	1-12	704	995

Metric Fasteners Class 8.8 and 10.9

Size	Torque (ft-lb) Class 8.8	Torque (ft-lb) Class 10.9	Size	Torque (ft-lb) Class 8.8	Torque (ft-lb) Class 10.9
M6 x 1.00	7.7	11.1	M20 x 2.50	325	450
M8 x 1.25	19.5	26.9	M22 x 2.50	428	613
M10 x 1.50	38.5	53.3	M24 x 3.00	562	778
M12 x 1.75	67	93	M27 x 3.00	796	1139
M14 x 2.00	107	148	M30 x 3.50	1117	1545
M16 x 2.00	167	231	M33 x 3.50	1468	2101
M18 x 2.50	222	318	M36 x 4.00	1952	2701

These torque values apply to fasteners except those noted in the instructions.

This manual covers vehicles which have been recommended for carrying the spreader. Please see your local dealer for proper vehicle applications.

CERTIFICATION

⚠ WARNING

New untitled vehicle installation of a spreader requires National Highway Traffic Safety Administration altered vehicle certification labeling. Installer to verify that struck load of snow or ice control material does not exceed GVWR or GAWR rating label and complies with FMVSS.

APPROXIMATE MATERIAL WEIGHTS

⚠ WARNING

Overloading could result in an accident or damage. Do not exceed GVWR or GAWR as found on the driver-side cornerpost of vehicle.

⚠ WARNING

Do not overload vehicle. Use chart below to calculate weight of material. Weights of material are an average for dry materials.

⚠ CAUTION

Never use wet materials or materials with foreign debris with any of these spreaders. These units are designed to handle dry, clean, free-flowing material.

⚠ CAUTION

Read and adhere to manufacturer's ice-control material package labeling including Material Safety Data Sheet requirements.

Material	Density (lb/ft^3)
Rock Salt (Dry)	80–90

Weight of spreader and mount must be added to struck material weight to determine total spreader weight. Do not exceed maximum material capacity as shown on the safety label (see Safety section).

Use only bagged rock salt with the spreader. Other forms of spreading material are not compatible with the tailgate spreader.

NOTE: If spreader and ice control material loading is in doubt, weigh vehicle for compliance with vehicle ratings.

ASSEMBLY INSTRUCTIONS

The spreader shall be installed according to instructions supplied. Your local outlet is trained to provide this service and service your spreader with factory original parts.

1. Place the drive assembly on a flat, level surface. Attach the receiver mount to the drive assembly as shown below using four 1/2" x 1-1/2" cap screws. Tighten the fasteners according to the torque chart.

Drive Assembly

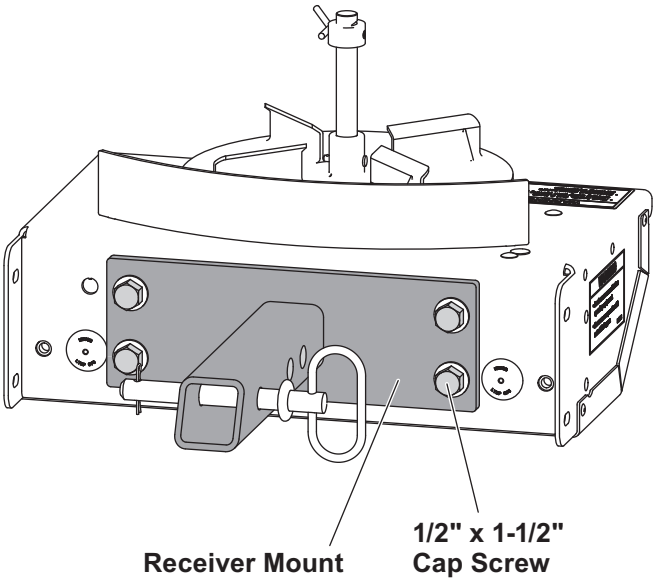

2. Mount the support frame to the drive assembly using the six supplied 5/16" x 1" cap screws and the four supplied 5/16" locknuts. Tighten the fasteners according to the torque chart.

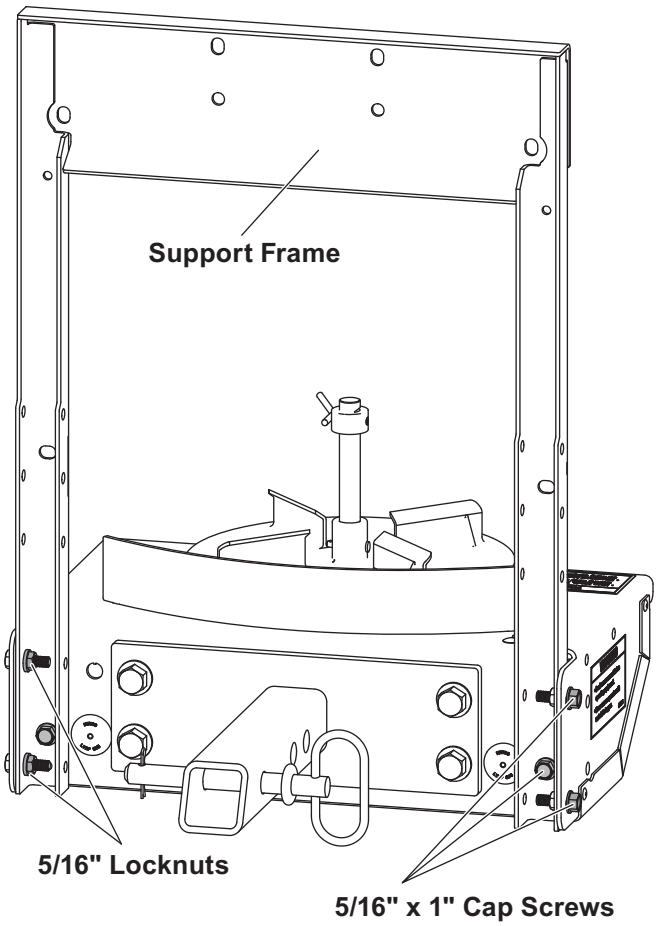

3. Mount the throat support to the support frame at the two lower holes by using the four supplied 5/16" x 1" cap screws and 5/16" locknuts. Tighten the fasteners according to the torque chart.

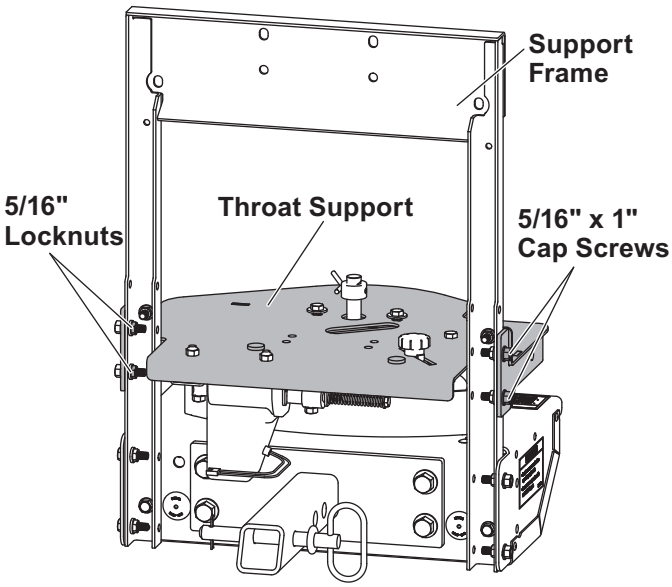

⚠ CAUTION

Before drilling holes, check to be sure that no vehicle wiring or other components could be damaged.

4. Drill four holes in the hopper using the support frame holes as a template. Place the backing plate inside the hopper.

5. Fasten the hopper to the support frame by running the four supplied 5/16" x 1" cap screws through the backing plate, hopper, and support frame from inside the hopper. Attach using the four supplied 5/16" locknuts. Tighten the fasteners according to the torque chart.

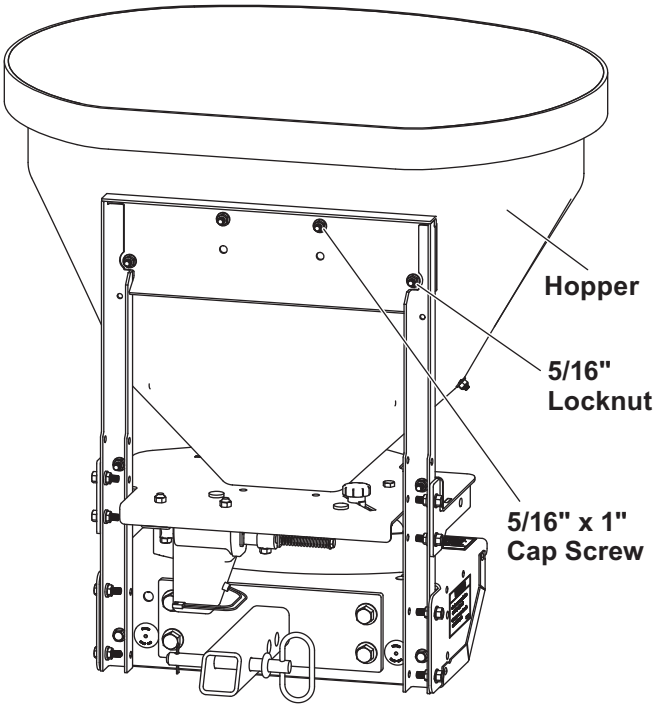

RECEIVER MOUNT SPREADER

⚠ CAUTION

During removal or mounting, securely grip spreader to avoid dropping.

The spreader shall be installed according to instructions supplied. Your local outlet is trained to provide this service and service your spreader with factory original parts.

Insert the assembled unit into the receiver hitch and secure with the supplied hitch pin and hairpin cotter.

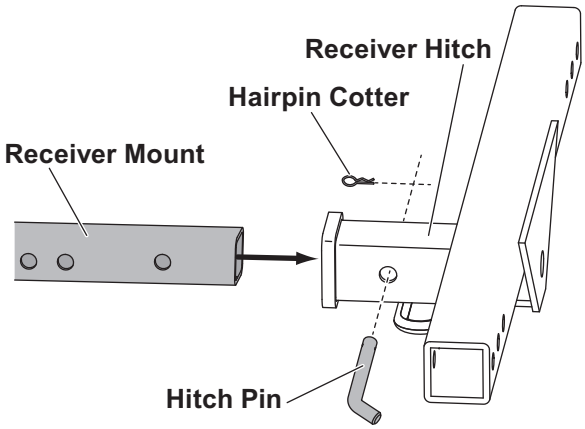

WIRING INSTRUCTIONS

1. Mount the rear plug bracket on the back of the vehicle. Locate the harness toward the center of the bumper as it will reduce the amount of debris getting onto the plug. Apply dielectric grease to the plug.

2. Route the wires from the back to front using zip-ties or clamps (not supplied). Do not secure to brake lines, fuel lines, or near exhaust, engine, or moving parts. Use the heavy-duty zip-ties along the frame and lighter duty zip-ties everywhere else.

⚠ CAUTION

Before drilling holes, check to be sure that no vehicle wiring or other components could be damaged.

3. Drill a 3/4" hole in the fire wall near the steering column. Be sure to check for wires and components in the way (both sides of the fire wall) before drilling the hole.

⚠ CAUTION

Do not alter, modify, or install additional components in shaded areas shown below. Failure to comply may interfere with airbag deployment or cause injury to operator in an accident.

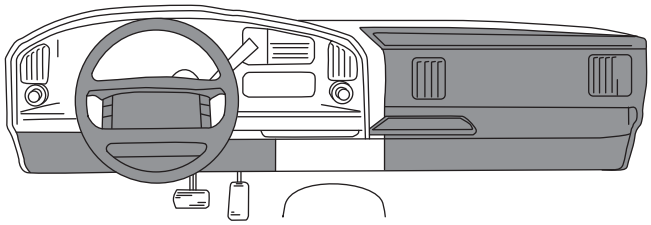

4. Run the data cable into the cab. Zip-tie the wire under the dash so that it does not get in the way of the brake or accelerator pedal. Leave enough of the data cable outside of the dash so that the operator can hold the control pendant in hand. Install the pendant mounting base and bracket. Stick the hook/loop fastener to the pendant and pendant base.

5. Connect the harness to the back of the control. Zip-tie loose control harness and move to the engine compartment. Do not mount close to any heater vents.

6. Connect power leads to the battery:

   Red: POSITIVE (+)

   Black: NEGATIVE (–)

   Always connect to the primary battery if using a dual battery system. Secure loose loom to any other large or medium vehicle harness with medium duty zip-ties to secure the wiring harness.

7. Push the ON/OFF button on the control to check for power. When confirmed, turn power OFF. The electrical portion of the installation is complete.

WIRING DIAGRAM: MODEL TS-300-EG-1

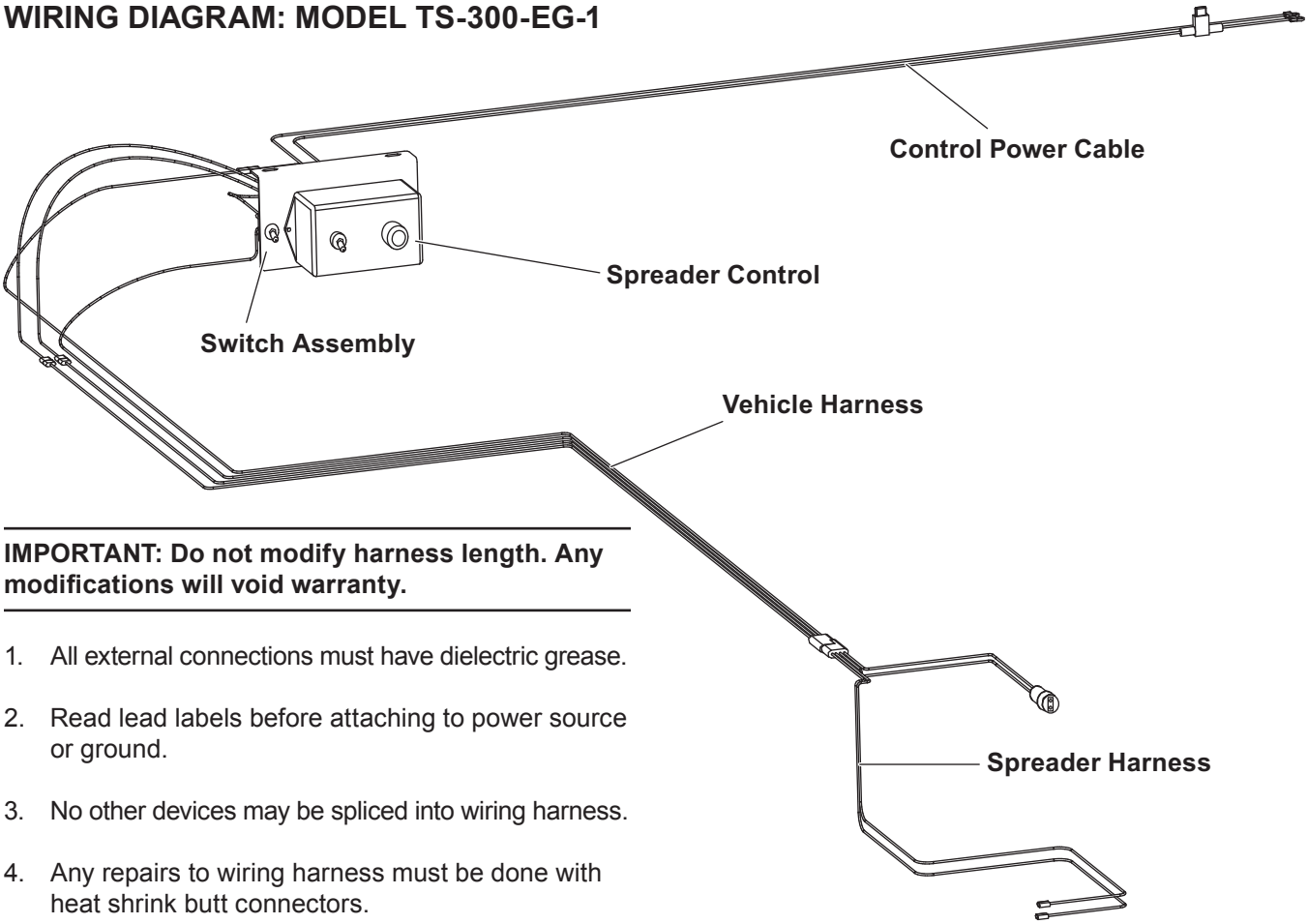

IMPORTANT: Do not modify harness length. Any modifications will void warranty.

1. All external connections must have dielectric grease.
2. Read lead labels before attaching to power source or ground.
3. No other devices may be spliced into wiring harness.
4. Any repairs to wiring harness must be done with heat shrink butt connectors.

Spreader Harness

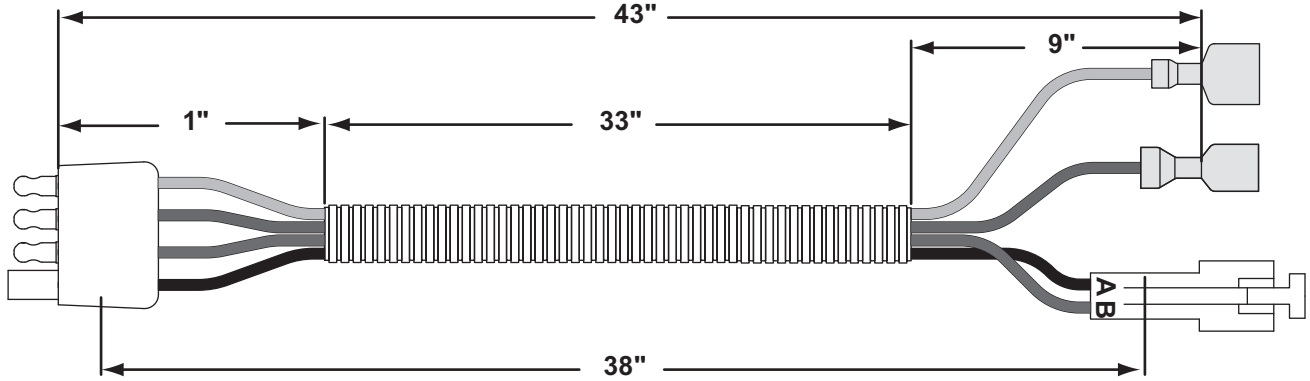

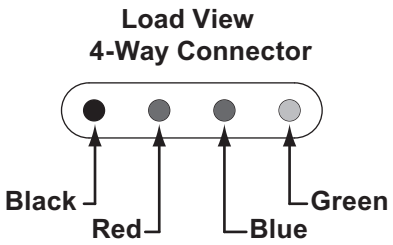

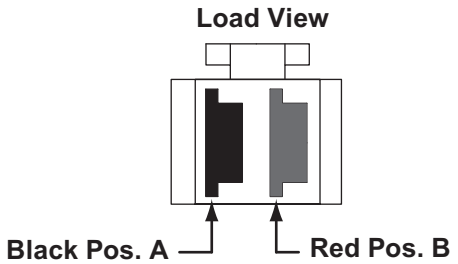

HARNESS DIAGRAMS: MODEL TS-300-EG-1

Vehicle Harness

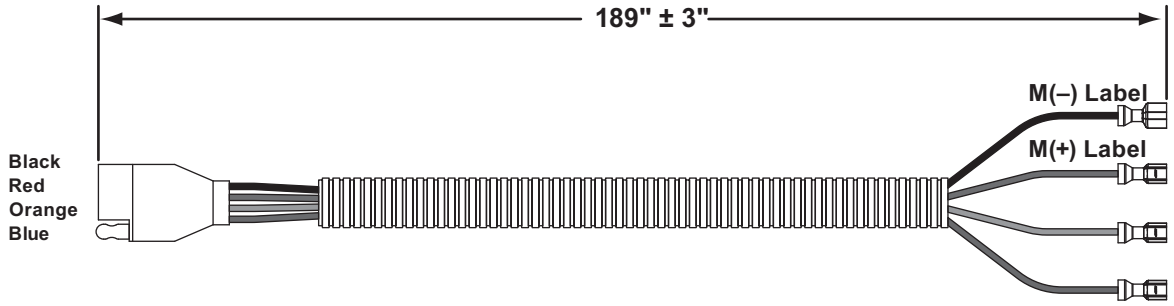

Battery Harness

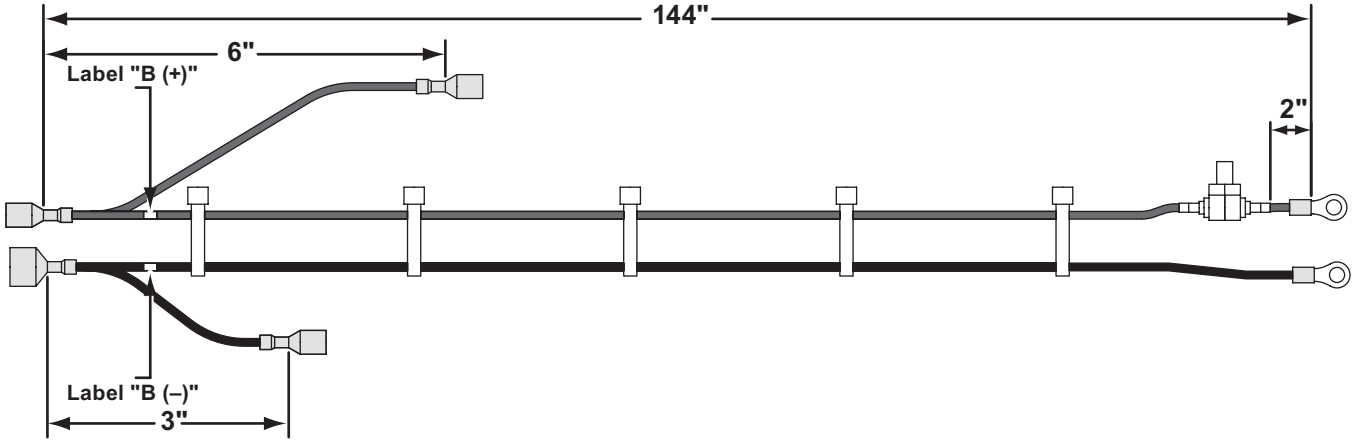

HARNESS DIAGRAMS: MODEL TS-300-EG-1

Control

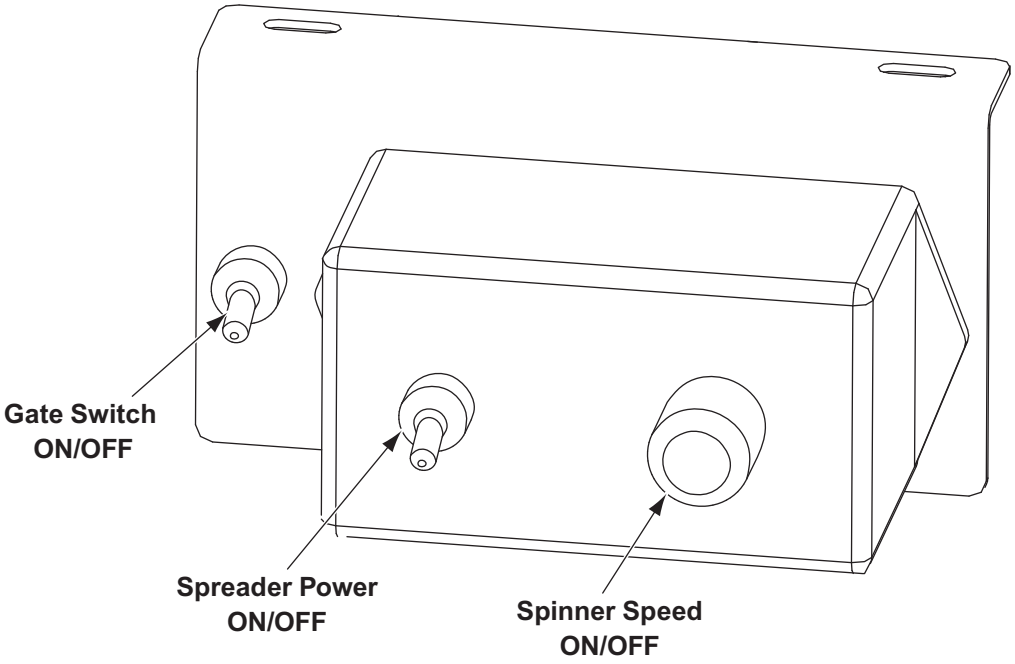

Switch Assembly

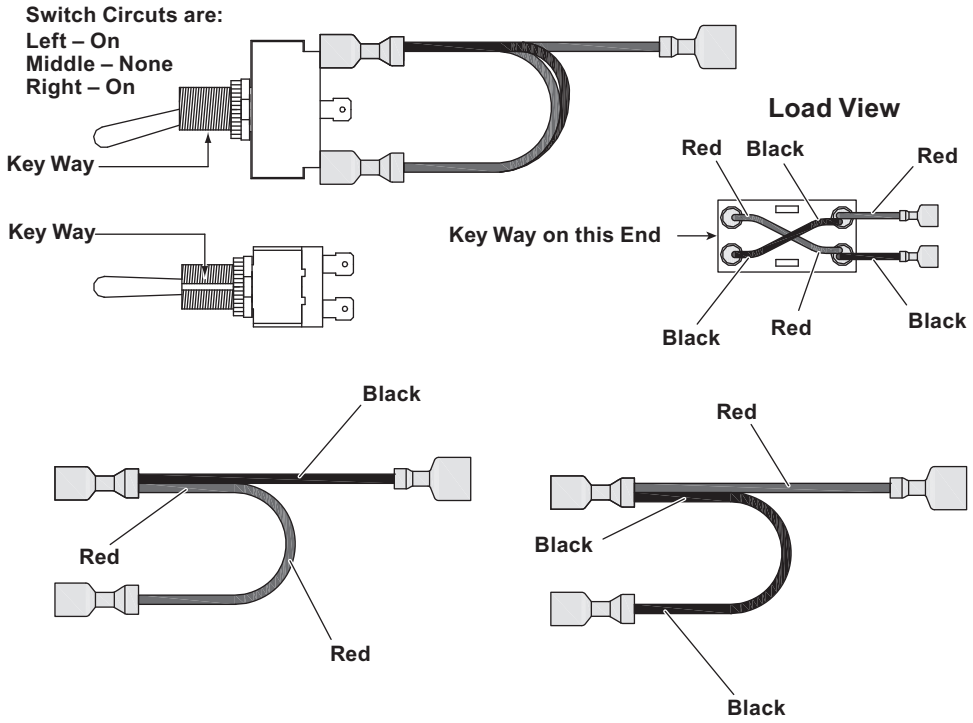

WIRING DIAGRAM: MODEL TS-300-1

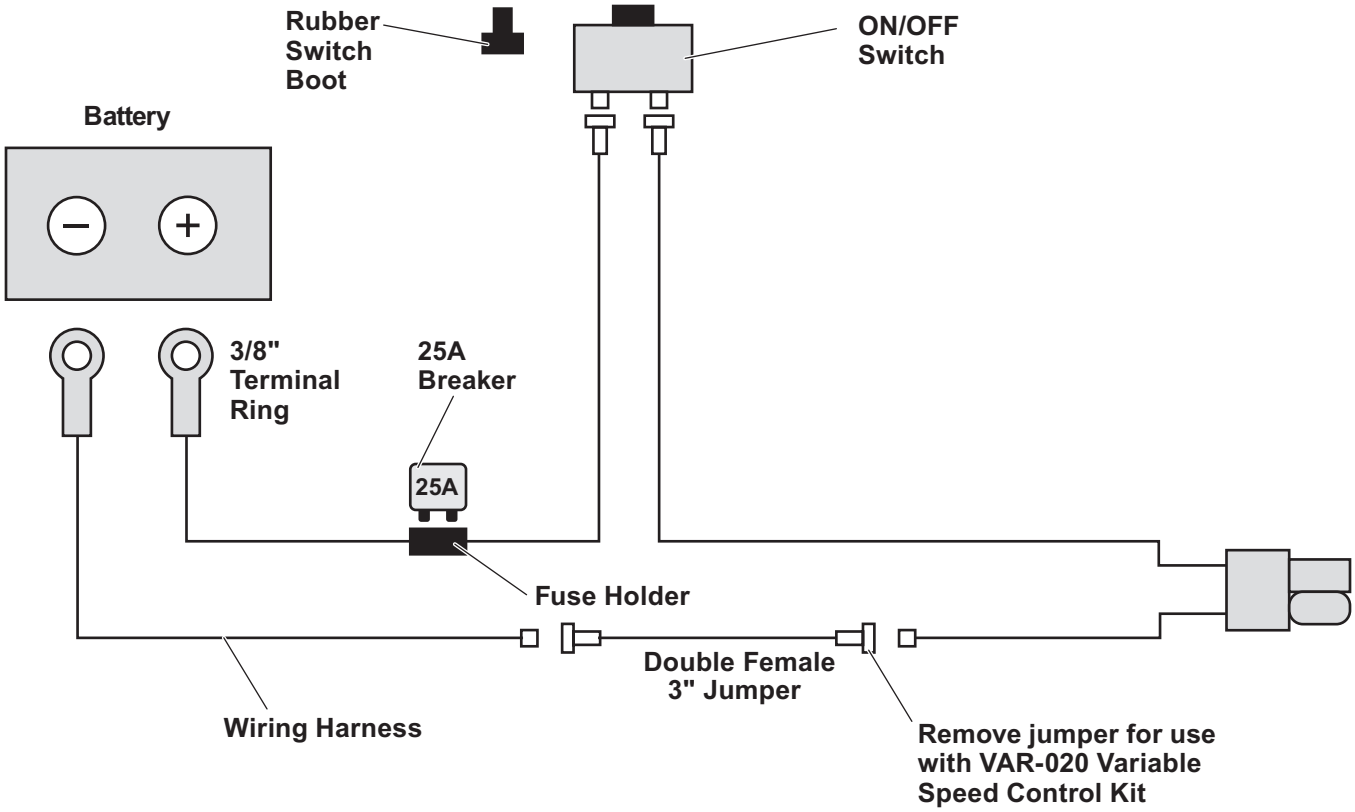

IMPORTANT: In the off-season, remove the control and store in a cool, dry place. The interior summer temperatures could damage the circuit board and void the warranty.

Wiring Instructions for Model TS-300-1

1. Install switch at desired location.
2. Run the spreader/vehicle harness from the rear of the vehicle to the switch area. Attach the female spade red wire to the switch. Leave the black wire for Step 5.
3. Route the power harness from the battery to the switch/control.
4. Attach the red lead to the POSITIVE (+) side of the battery and the black lead to the NEGATIVE (–) side of the battery.
5. Attach the female spade red wire on the switch terminal. Using 3" double female black wire jumper, attach the black wire from the power harness to the black wire of the vehicle harness.
6. Install the rubber weatherproof boot on the switch before finishing the installation.
7. Insert dielectric grease on the terminals of SAE plug at rear of vehicle.

Calibration Disclaimer

It is the responsibility of the person using this equipment to make sure that every type of material is properly calibrated to perform as expected. This process should take place on a solid flat surface away from drains and livestock areas in order to achieve a safe and accurate reading for proper material distribution. Failure to do so may cause an over/under application that could damage turf areas or give an ineffective pest control treatment. Any calibration charts contained in this manual are given as a reference point only and should not be used as an absolute condition. Spending a few extra minutes to properly calibrate will not only save on wasted materials and time but also protect turf and other vegetation. Below are several points to be aware of before operating your spreader in the field.

Flow rates of chemicals can change for many reasons:

- Formulations vary within the same brand or even between brands
- Formulations vary between batches or dates of manufacture
- Humidity can cause the material to clump and flow poorly
- Poor spreader maintenance can cause flow changes
- Slide stop has moved or calibrated to another type of material
- Human error can cause rate miscalculation

Items needed for calibration:

- A way to catch the material for weighing
- A device to measure distance
- A scale to weigh your product
- A stop watch or other means to measure time

Conversion:

To convert pounds per 1000 square feet to pounds per acre, multiply your rate by 43.6.
To convert miles-per-hour (mph) to feet-per-minute (fpm), multiply miles-per-hour by 88.

Other important information:

- 1 acre is equal to 43,600 square feet (ft^2).
- Ground speed is very important to keep in mind when doing calculations. Convert mph to feet per minute.

Use a level, open area of pavement to calibrate your spreader. Set the gate stop in the middle as a starting point. Fill the hopper with the material you desire to use. Turn the spreader ON. Adjust spinner speed to achieve the desired spread width. Record the spinner speed and the resulting spread width. The spinner fins can also be adjusted to change the spread pattern.

Determine the speed at which you will be driving while spreading in feet-per-minute (fpm). Determine the desired application rate converted to pounds-per-square-foot (lb/ft^2). Use the equation below to determine the pounds-per-minute (lb/min) that the gate setting must allow.

Desired Application Rate (lb/ft^2) x **Spread Width (ft)** x **Speed (ft/min)** = **Pounds-Per-Minute (lb/min)**

Open the gate using the switch mounted on the left of the control. Do <u>not</u> have the spinner ON during this step. Put a bucket or other means of catching material under the spreader. Leave the gate open for one minute. Brush all excess off the spreader and motor enclosure into the bucket. Weigh the bucket with material. Subtract the weight of the bucket when empty. Record the result. Adjust the gate based on this result to achieve the required pounds-per-minute rate. Once this setting is established, you are ready to spread. Record this information for future use.

Example: When spreading material XYZ:

Spinner Speed 5 [width = 14 ft]
Drive 3.5 mph [308 fpm]
Gate = 13

You can begin spreading with the vehicle speed, gate setting, and spinner speed used in your calculations.

TURFEX KEY SETTING	Gate Setting	Materials: Urea 46-0-0	Lesco Turface	Lesco Shade Mix	Lesco Fert 30-0-10	Lesco Insecticide
	1	X	X	X	X	0.57
	2	1.39	0.83	X	0.39	5.28
	3	7.15	2.11	X	3.84	14.38
	4	10.54	X	0.18	8.79	18.06
	5	15.97	X	0.40	13.55	30.24
	6	24.66	X	0.51	17.07	35.04
	7	31.36	14.70	0.66	23.94	50.32
	8	35.70	X	0.98	29.74	56.22
	9	47.70	X	1.78	39.38	64.56
	10	55.29	X	5.59	45.20	76.47
	11	63.39	37.95	7.27	53.22	82.59
	12	73.59	X	8.72	64.64	106.49
	13	78.60	X	10.00	69.06	122.64
	14	83.08	X	11.81	73.80	133.72
	15	93.52	57.32	11.94	91.32	145.00
		FLOW RATES ARE CALCULATED AT POUNDS PER MINUTE (lb/min)				

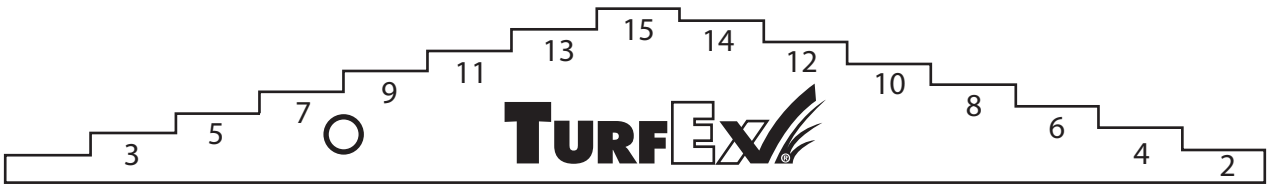

DRIVING AND SPREADING ON SNOW AND ICE

⚠ CAUTION

Drinking and then driving or spreading is very dangerous. Your reflexes, perceptions, attentiveness, and judgment can be affected by even a small amount of alcohol. You can have a serious or even fatal collision if you drive after drinking. Please do not drink then drive or spread ice-control materials.

Follow your vehicle owner's manual instructions for driving in snow and ice conditions. Remember, when you drive on snow or ice, your wheels will not get good traction. You cannot accelerate as quickly, turning is more difficult, and you will need longer braking distance. Wet and hard packed snow or ice offer the worst tire traction. It is very easy to lose control. You will have difficulty accelerating. If you do get moving, you may have poor steering and difficult braking, which can cause you to slide out of control.

Here are some tips for driving in these conditions:

- Drive defensively.
- Do not drink, then drive or spread ice-control materials.
- Spread or drive only when you have good visibility for operating a vehicle.
- If you cannot see well due to snow or icy conditions, you will need to slow down and keep more space between you and other vehicles.
- Slow down, especially on higher-speed roads. Your headlamps can light up only so much road ahead.
- If you are tired, pull off in a safe place and rest.
- The spreader's size and location reduce driver visibility to the rear of the vehicle. We recommend an OSHA compliant backup alarm for all governed employers.
- Keep your windshield and all glass on your vehicle clean to see around you.
- Dress properly for the weather. Wear layers of clothing; as you get warm, you can take off layers.

SPREADING TIPS

- Spread ice melters with the storm to prevent unmanageable levels of ice.
- Never exceed 10 mph (16 km/h) when spreading.
- For a heavier pass, drive slower.
- Never operate spreader near pedestrians.
- Calculate spread pattern when near vegetation.

⚠ CAUTION

Empty the hopper before removing the spreader.

⚠ CAUTION

During removal or mounting, securely grip spreader to avoid dropping.

1. Unplug the spreader harness from the vehicle harness.

2. Remove the hitch pin from the receiver hitch.

3. Remove the spreader from the vehicle and stand spreader in an upright position. This may require additional support.

⚠ WARNING

Never remove the spreader with material in the hopper.

⚠ CAUTION

Disconnect electric power at spreader electrical wiring harness connection and tag out if required before servicing or performing maintenance.

⚠ CAUTION

- **When replacing parts, use only original manufacturer's parts. Failure to do so will void warranty.**
- **The control is a solid-state electronic unit and is not serviceable. Any attempt to service will void warranty.**
- **There are no serviceable parts in the motor/transmission assembly. Any attempt to service will void warranty.**
- **When pressure washing motor enclosure area, keep spray at least 36" away from motor enclosures.**

LUBRICATION

To keep your spreader running smoothly, observe the following recommendations:

- Lubricate bearings after every 20 hours of use.
- Apply a small amount of light oil to latches as needed.

AFTER EACH USE

⚠ CAUTION

DO NOT leave unused material in hopper. Material can freeze or solidify, causing unit to not work properly. Empty and clean after each use.

- Wash out the hopper and rinse off all external surfaces.
- Apply dielectric grease on all electrical connections to prevent corrosion.

AT THE END OF EACH SEASON OR AFTER EXTENDED STORAGE

- Wash out the hopper and rinse off all external surfaces.
- Apply dielectric grease on all electrical connections to prevent corrosion.
- Lubricate all grease fittings with good quality multipurpose grease.
- Oil or paint all bare metal surfaces.
- If motor cover is removed for any reason, use silicone sealant to ensure weatherproofing of enclosure.

STORAGE

Store the spreader in a clean, dry location and away from direct sunlight.

TAILGATE SPREADER

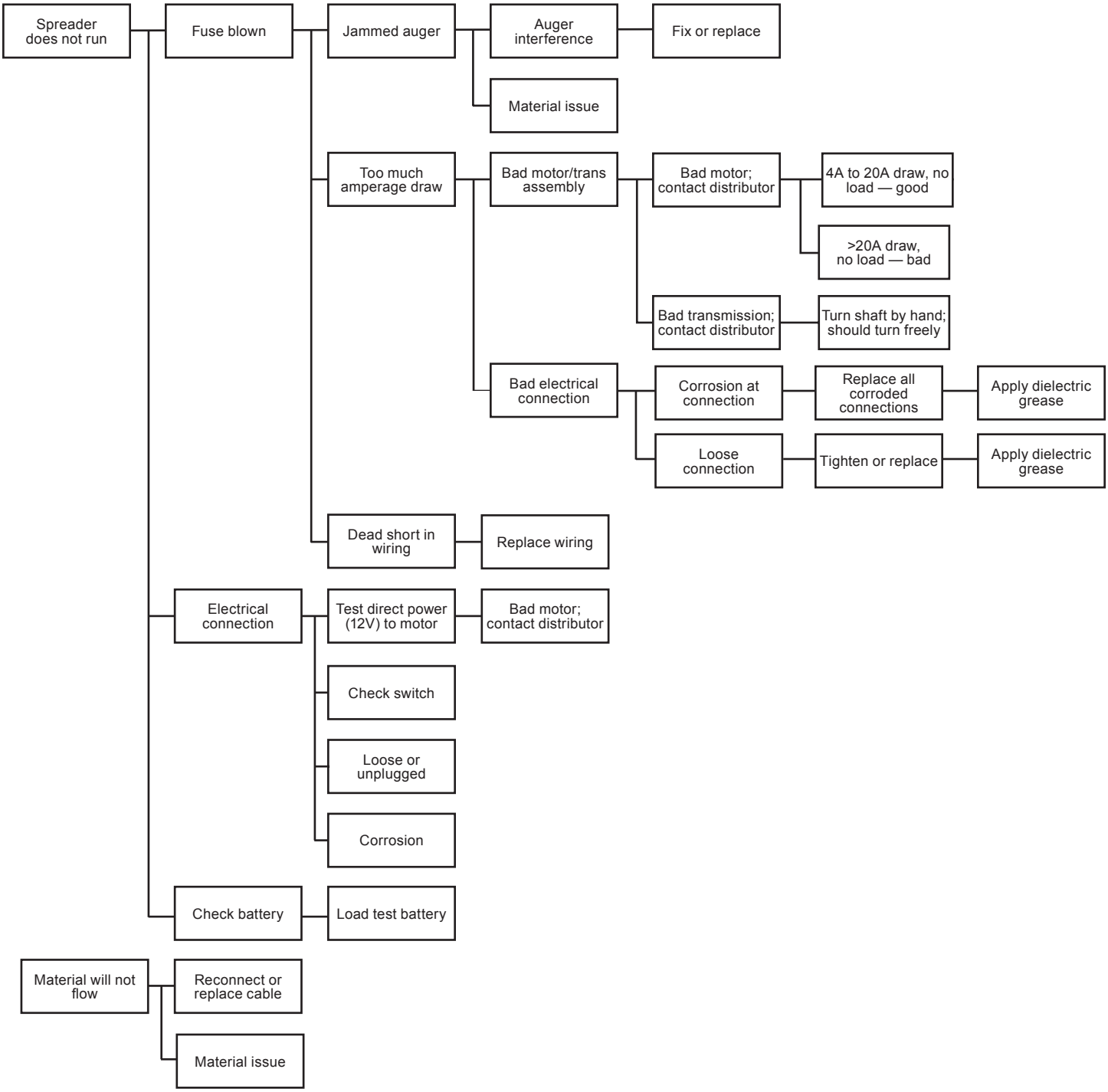

TrynEx International
531 Ajax Drive
Madison Heights, MI 48071-2429
www.turfexproducts.com

A DIVISION OF DOUGLAS DYNAMICS, LLC

TrynEx International reserves the right under its product improvement policy to change construction or design details and furnish equipment when so altered without reference to illustrations or specifications used. TrynEx International or the vehicle manufacturer may require or recommend optional equipment for spreaders. Do not exceed vehicle ratings with a spreader. Patent pending. TrynEx International offers a limited warranty for all spreaders and accessories. See separately printed page for this important information. The following are registered (®) trademarks of Douglas Dynamics, LLC: TurfEx®.

Printed in U.S.A.

Lit. No. 75371, Rev. 01 October 1, 2018